Helilok® Style Direct Replacement Parts

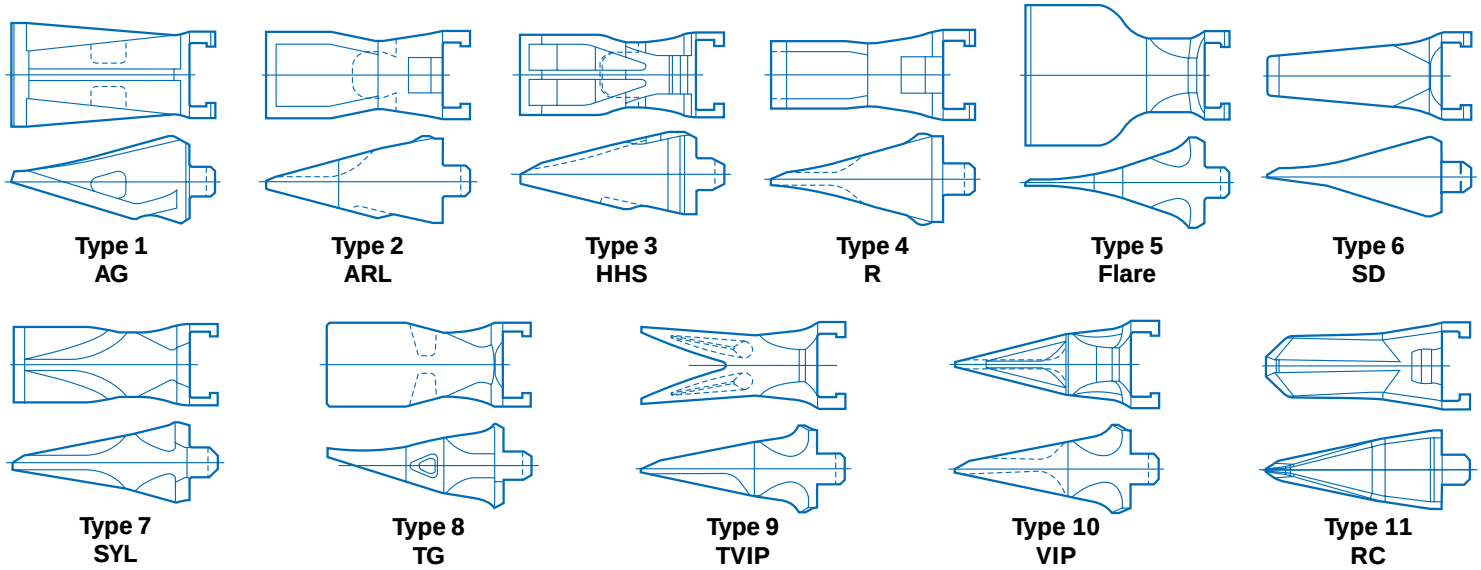

Tooth Dimensions - Inches (MM)

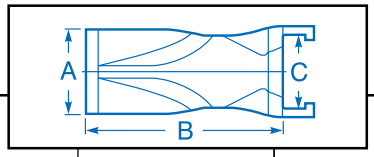

Tooth Series	Part Number	Tooth Type	Tooth Fastener	Removal Tool	A	B	C	Weight Lbs.	Weight Kgs.
21	21S5FHX	5	21LKSPN	552513HX	5.000 (127)	7.500 (190)	2.750 (70)	11.0	4.9
	21SYLHX	7			3.000 (76)	7.500 (190)	"	7.6	3.4
	21TGHX	8			3.00 (76)	7.000 (178)	"	7.2	3.3
	21TVIPHX	9			3.313 (84)	7.125 (181)	"	7.5	3.4
	21VIPHX	10			--	7.125 (181)	"	6.5	2.9
27	27AGHX	1	27LKXPN	552513HX	5.125 (130)	8.375 (213)	3.111 (79)	17.1	7.7
	27S6FX	4			6.00 (152)	8.750 (222)	"	14.5	6.6
	27SDHX	6			2.000 (51)	8.00 (203)	"	11.0	4.9
	27SYLHX	7			3.500 (89)	8.188 (208)	"	10.0	4.5
	27TGHX	8			4.000 (102)	8.000 (203)	"	10.9	4.9
	27TVIPHX	9			3.750 (95)	7.750 (197)	"	10.4	4.7
	27VIPHX	10			--	7.750 (197)	"	8.8	4.0
37	37AGHX	1	37LKPBN	552512HX	6.000 (152)	10.500 (267)	3.688 (94)	29.6	13.4
	37ARLHX	2			4.875 (124)	9.750 (248)	"	29.1	13.2
	37RHX	4			3.750 (95)	8.000 (203)	"	16.9	7.7
	37S8FHX	5			8.000 (203)	11.000 (279)	"	25.0	11.3
	37SDHX	6			2.250 (57)	10.000 (254)	"	19.0	8.6
	37SYLHX	7			4.625 (117)	9.500 (241)	"	17.5	7.9
	37TGHX	8			4.750 (121)	9.500 (241)	"	20.5	9.3
	37TVIPHX	9			4.500 (114)	9.500 (241)	"	17.3	7.8
	37VIPHX	10			--	9.500 (241)	"	15.6	6.8
	37RC	11			3.500 (89)	9.125 (232)	"	23.0	10.4
47	47AGHX	1	47LKPN	552512HX	7.00 (178)	11.750 (28)	4.438 (113)	43.5	19.7
	47ARLHX	2			5.188 (132)	10.750 (273)	"	36.4	16.5
	47RHX	4			4.500 (114)	9.250 (235)	"	25.1	11.4
	47S9FHX	5			9.000 (229)	12.688 (322)	"	35.2	15.9
	47SDHX	6			2.500 (64)	10.750 (273)	"	25.9	11.7
	47SYLHX	7			5.000 (127)	11.125 (283)	"	27.5	12.5
	47TGHX	8			5.500 (140)	11.00 (279)	"	28.7	13.0
	47TVIPHX	9			5.125 (130)	11.00 (279)	"	25.4	11.5
	47VIPHX	10			--	11.000 (279)	"	24.2	10.9
	47RC	11			4.025 (102)	11.750 (298)	"	38.5	17.5

Helilok® is a registered trademark of the Esco Corporation

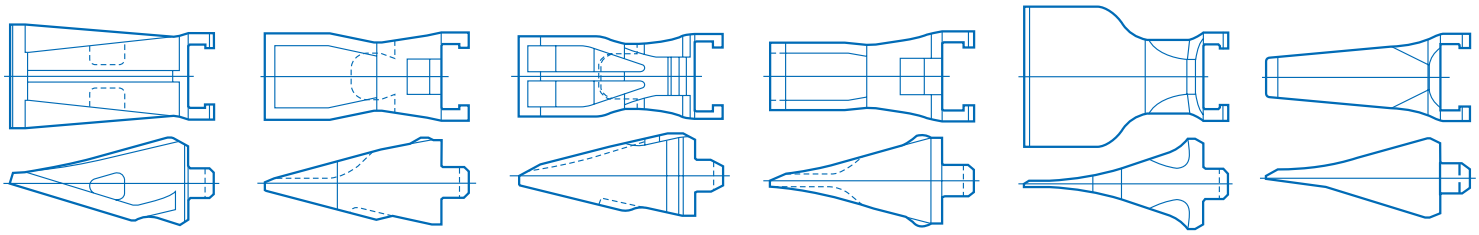

Type 1 AG | **Type 2 ARL** | **Type 3 HHS** | **Type 4 R** | **Type 5 Flare** | **Type 6 SD**

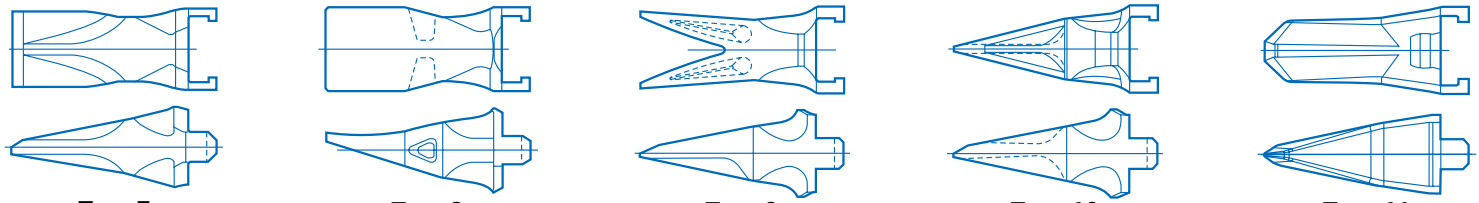

Type 7 SYL | **Type 8 TG** | **Type 9 TVIP** | **Type 10 VIP** | **Type 11 RC**

Tooth Dimensions - Inches (MM)

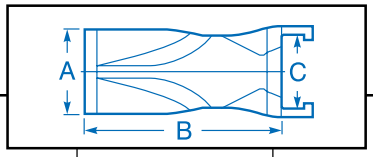

Tooth Series	Part Number	Tooth Type	Tooth Fastener	Removal Tool	A	B	C	Weight Lbs.	Weight Kgs.
57	57AGHX	1	57LKPN	552512HX	7.750 (197)	13.750 (349)	5.375 (136)	71.3	32.3
	57ARLHX	2			6.250 (159)	12.250 (311)	"	57.9	26.3
	57HHSHX	3			6.250 (159)	12.250 (311)	"	65.0	29.5
	57RHX	4			5.000 (127)	11.000 (279)	"	43.7	19.8
	57SDHX	6			3.000 (76)	13.500 (343)	"	45.0	20.4
	57SYLHX	7			5.500 (140)	12.375 (314)	"	43.0	19.5
	57TVIPHX	9			5.875 (149)	13.125 (333)	"	42.8	19.4
	57VIPHX	10			--	13.125 (333)	"	37.3	16.9

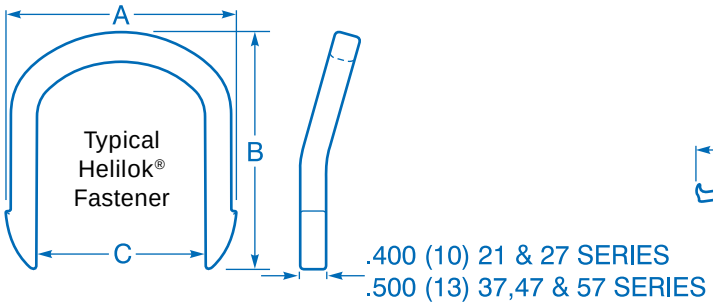

Tooth Series	Part Number	Fastener Dimensions - Inches (MM) A	B	C	Weight Lbs.	Weight Kgs.
21	21LKSPN	2.875 (73)	3.094 (79)	1.980 (50)	0.3	0.1
27	27LKXPN	3.313 (84)	3.125 (79)	2.50 (63)	0.4	0.2
37	37LKBPN	4.00 (102)	4.250 (108)	2.781 (71)	0.7	0.3
47	47LKPN	4.563 (116)	4.750 (121)	3.344 (85)	0.9	0.4
57	57LKPN	5.125 (130)	5.156 (131)	3.922 (100)	0.9	0.4

Fastener Removal Tools

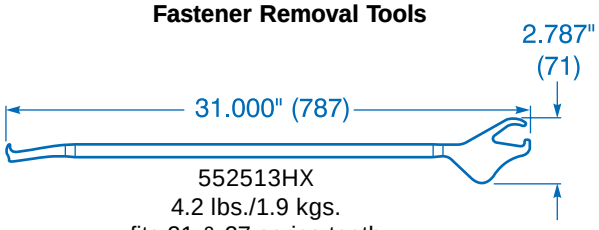

552513HX
4.2 lbs./1.9 kgs.
fits 21 & 27 series teeth

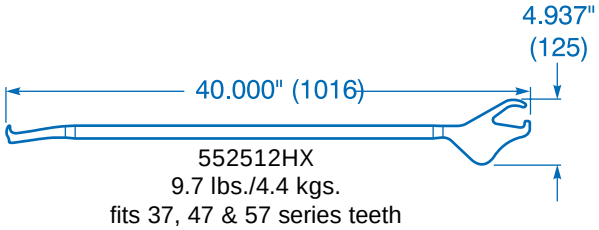

552512HX
9.7 lbs./4.4 kgs.
fits 37, 47 & 57 series teeth

SAFETY FIRST: Hensley recommends that you use a soft-faced hammer **and** ANSI-approved (Z87.1) eye protection while using our products.

Your Authorized Hensley Dealer

Hensley Industries, Inc.
An ISO 9001 Company
2108 Joe Field Rd. • Dallas, TX 75229

Customer Service
Toll Free U.S. / Canada
Phone: (888) 406 - 6262 Fax: (888) 241 - 3274
All Other Locations
Phone: (972) 406 - 6262 Fax: (972) 241 - 3274

www.hensleyind.com

Copyright © 2004 Hensley Industries, Inc.
This publication is protected under the copyright laws of the United States. Unauthorized duplication or distribution is prohibited.